MPPTSUN®
易 科

DONGGUAN SUNWORLD CO.,LTD

SUNWORLD Founded in **2011,**

It is a **Hong Kong** funded enterprise focusing on high quality Solar panels. It owned production factory, located in Dongguan City**，JinBoLi** Industry Park, Specializes in the production, R & D and sales of solar panels, flexible solar panels, controllers, folding bags and power generation systems.

The products are widely used in photovoltaic power generation system, off grid power generation, outdoor power supply, RV, street lamp, monitoring and security, water conservancy monitoring, Internet of things power generation and other fields,

With 12 years of foreign trade export experience, the products are exported to the United States, the European Union, Japan, more than 50 countries , and the factory has obtained **ISO9001, IEC, CE, ROHS, SGS, CNAS, Cerfication.**

SUNWORLD has been committed to becoming a world-class supplier of solar green energy solutions, serving the whole mankind

30W Flexible Solar Panel Spe

1、 Electrical parameters

Solar Panel Type	SWF30W
Maximum Power	30W
Voltage at Pmax	18.68V
Current at Pmax	1.61A
Open-Circuit Voltage	22.30V
Short-Circuit Current	1.69A
Solar Cell Efficiency	20%-22%
Power Tolerance	±5%
Working Temperature	-40℃-+55℃
Power Temperature Coefficient	-0.43%℃
(STC): irradiation1000w/ ㎡, temperature 25 ℃, air quality AM1.5, output power error: ± 5%]	

2、 Mechanical Parameters

Surface Material	PET
Cell Main Line	9BB/12BB
Cell Width	158.75/161.75/166/182
Cell Array	36pcs 3*12
Panel Size	525*345*3mm
Weight	0.8KG
Junction Box	IP67
Cable	PV2.5 50CM+MC4
Junction box Contact Material	Copper
Plastic Holder	4pcs
Diode Protect	1*10A Diode
Installation Requirements	The bent Less than 35 degrees, and it is gently handled. The bottom layer needs to be installed for heat insulation or heat dissipation.
Laminated Structure	3.2mm glass+EVA+Cell+EVA+Double Backsheet
Package	Plastic+Foam+Carton，2pc/carton

3、IV and PV Curve Chart

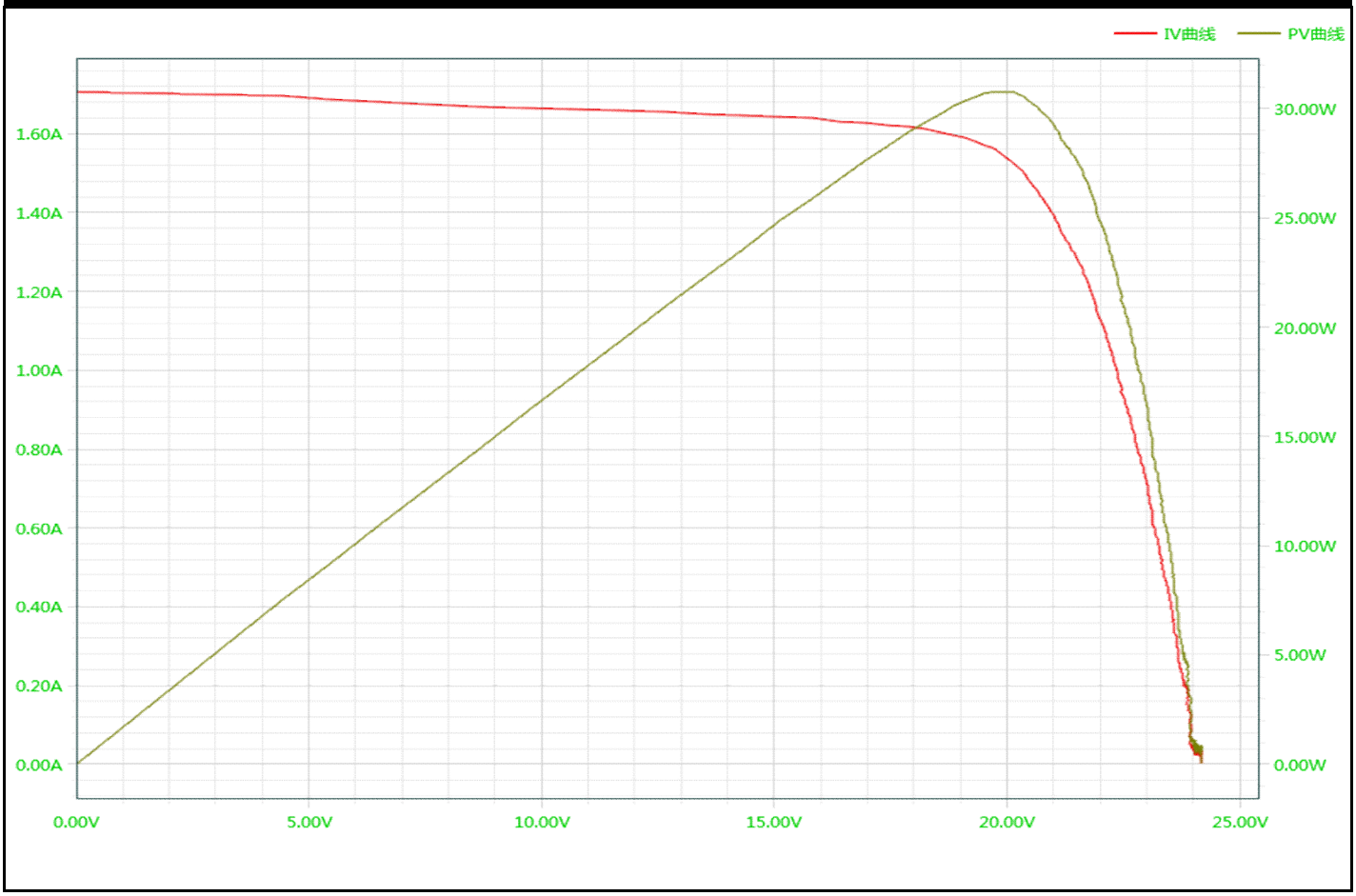

4、Front and Back Photo

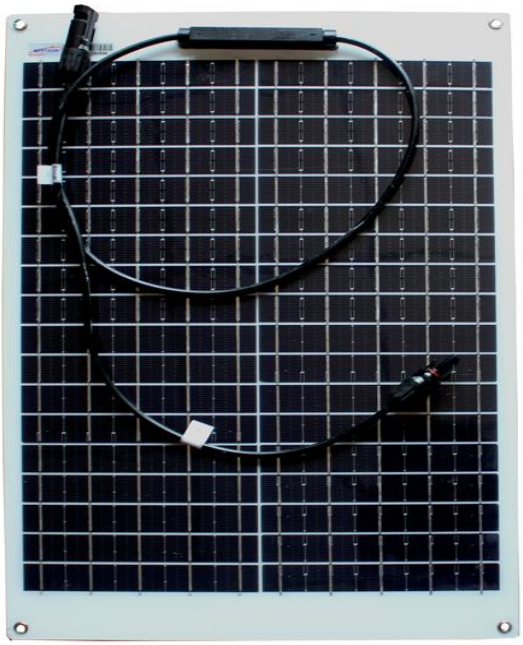

Juction box:
IP65 WaterProof
TUV Standard
Contains

MC4 Contact: IP65
TUV

Fix Hole:
Rustless Copper
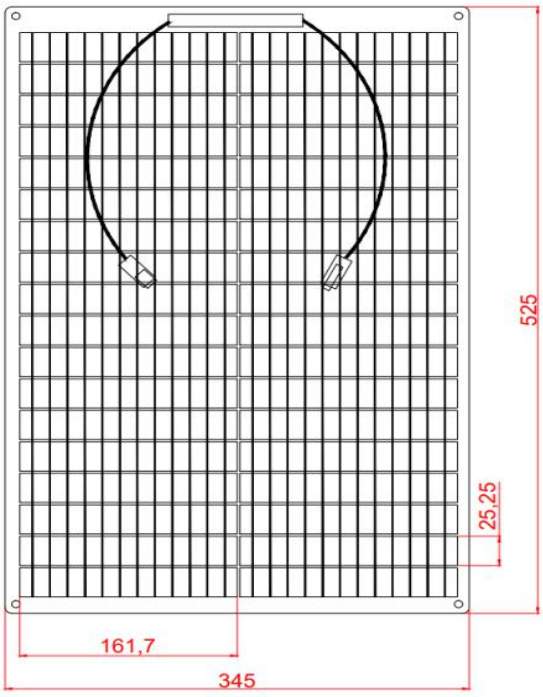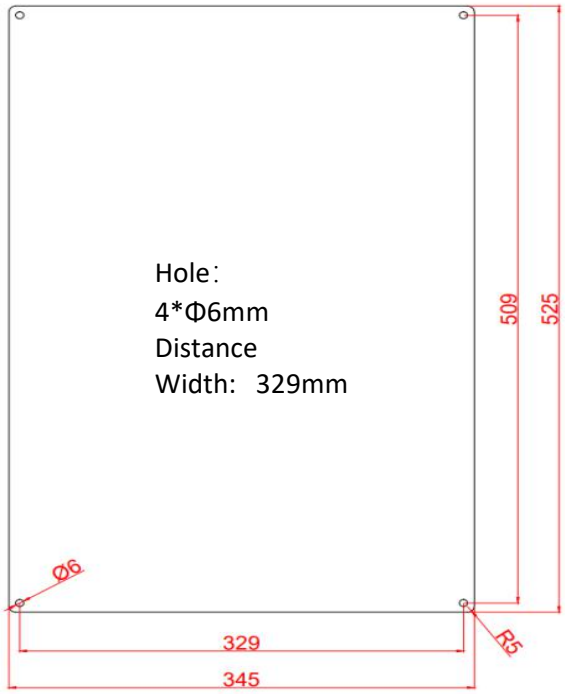
5、Product Drawing and Holes