MPPTSUN®
易 科

DONGGUAN SUNWORLD CO.,LTD

SUNWORLD Founded in **2011,**

It is a **Hong Kong** funded enterprise focusing on high quality Solar panels. It owned production factory, located in Dongguan City**，JinBoLi** Industry Park, Specializes in the production, R & D and sales of solar panels, flexible solar panels, controllers, folding bags and power generation systems.

The products are widely used in photovoltaic power generation system, off grid power generation, outdoor power supply, RV, street lamp, monitoring and security, water conservancy monitoring, Internet of things power generation and other fields,

With 12 years of foreign trade export experience, the products are exported to the United States, the European Union, Japan, more than 50 countries , and the factory has obtained **ISO9001, IEC, CE, ROHS, SGS, CNAS, Cerfication.**

SUNWORLD has been committed to becoming a world-class supplier of solar green energy solutions, serving the whole mankind

70W Solar Panel Spe

1、 Electrical parameters

Solar Panel Type	SWM70W
Maximum Power	70W
Voltage at Pmax	18.68V
Current at Pmax	3.75A
Open-Circuit Voltage	22.30V
Short-Circuit Current	3.95A
Solar Cell Efficiency	20%-22%
Power Tolerance	±5%
Working Temperature	-40℃-+80℃
Power Temperature Coefficient	-0.43%℃
(STC): irradiation1000w/ ㎡, temperature 25 ℃, air quality AM1.5, output power error: ± 5%]	

2、 Mechanical Parameters

Solar Cell Type	Monocrystalline
Cell Main Line	9BB/12BB
Cell Width	158.75/161.75/166/182
Cell Array	36pcs 3*12
Panel Size	810*515*25*20mm
Weight	4.5KG
IP Injunction Box	IP65
Cable	PV2.5 90CM+MC4
Plastic Holder	4pcs*25*20mm
Diode Protect	1*10A Diode
Maximum System Voltage	1000 VDC
Wind Coefficient Protection	60m/s(200kg/sq.m)
Laminated Structure	3.2mm glass+EVA+Cell+EVA+Backsheet+Frame
Package	Plastic+Foam+Carton，2pc/carton

3、IV and PV Curve Chart

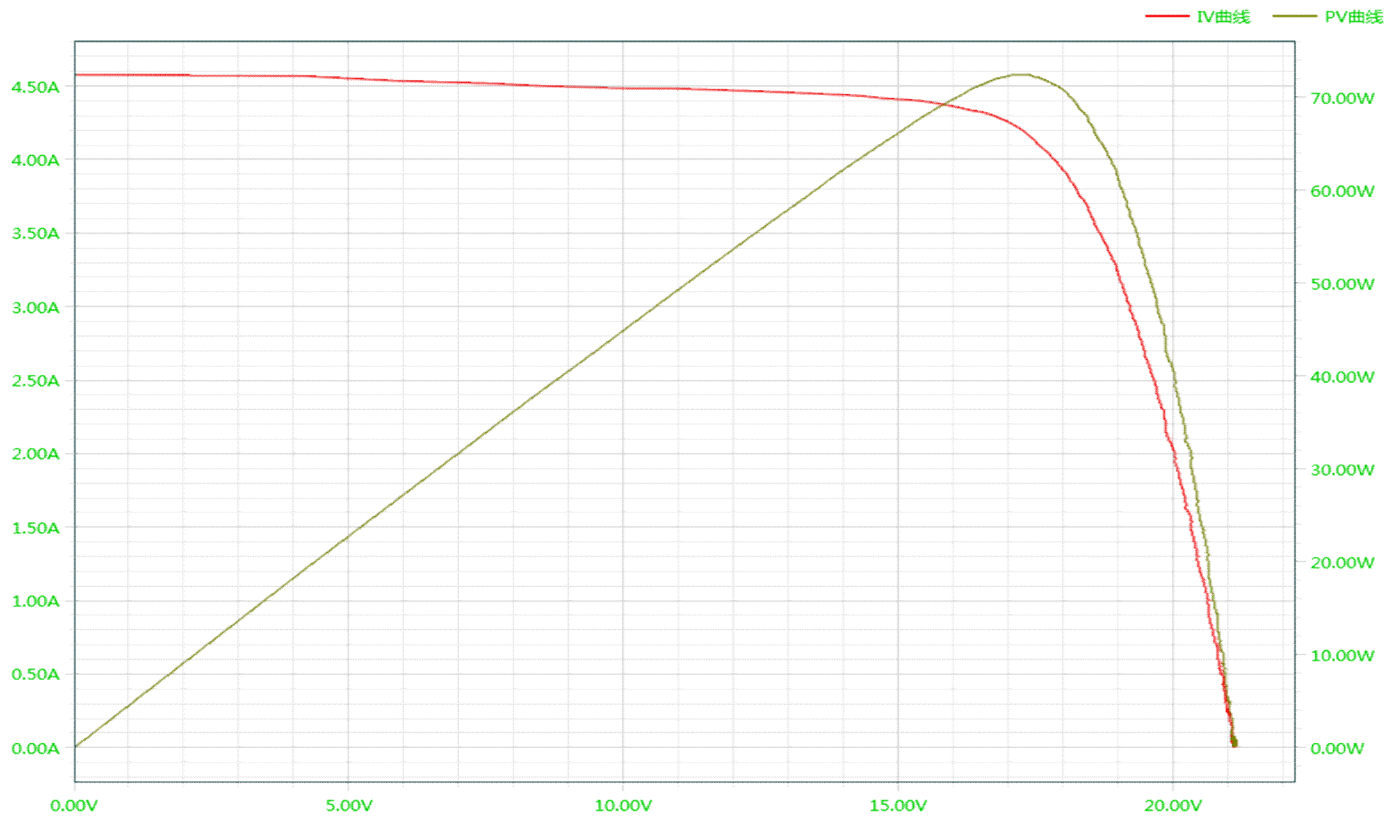

4、Front and Back Photo
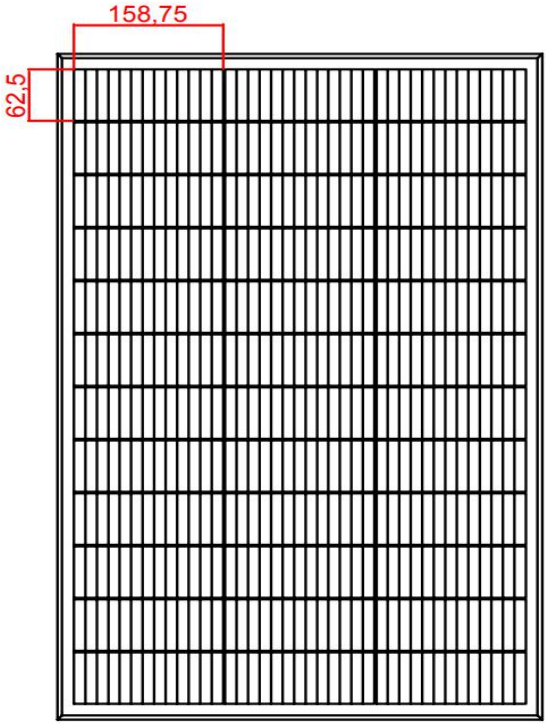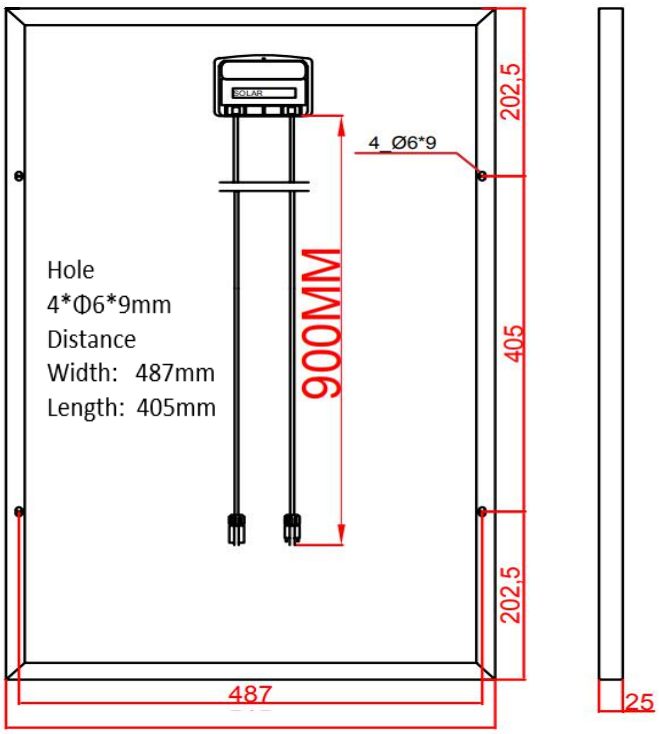
5、Product Drawing and Holes